INSTRUCTION MANUAL
CABINET GROVE
1609304

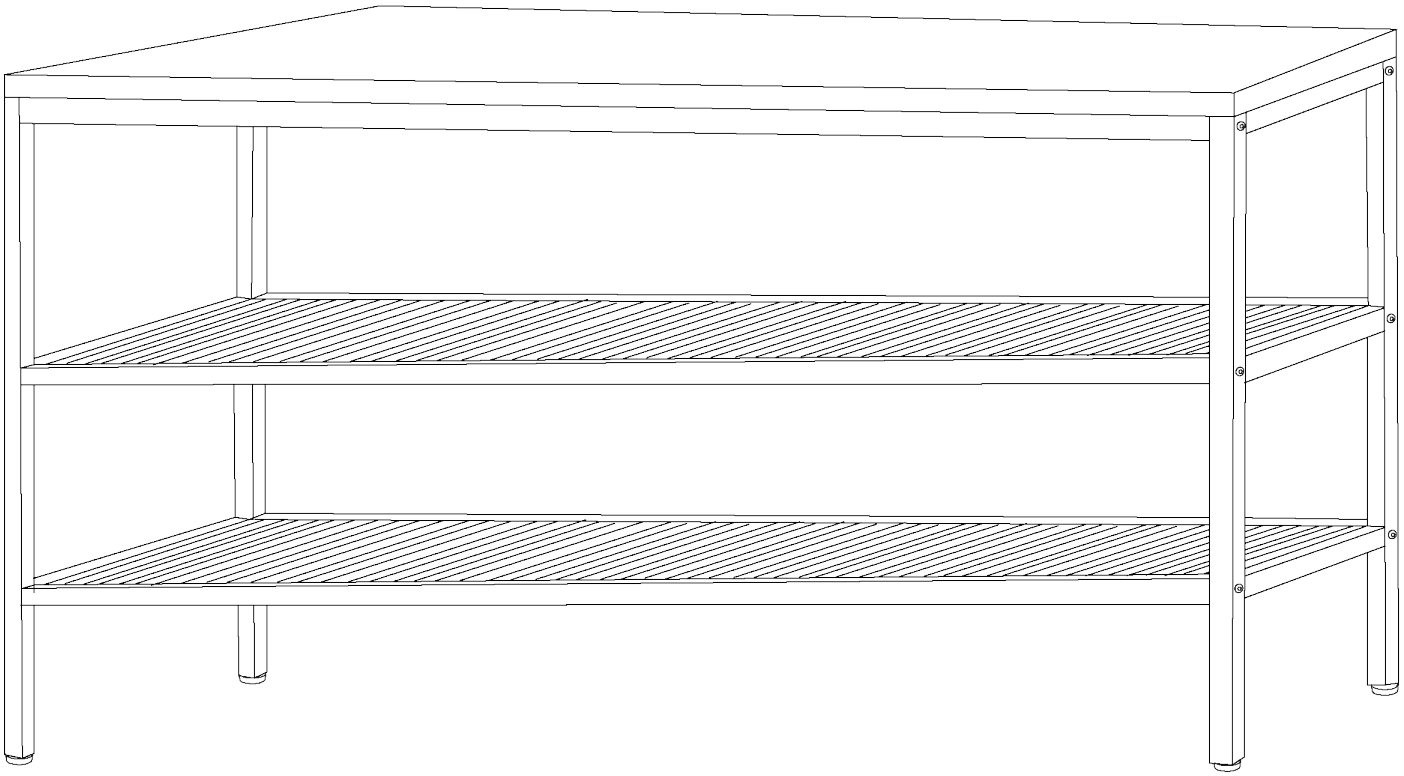

INSTRUCTION MANUAL
CABINET GROVE
1609304

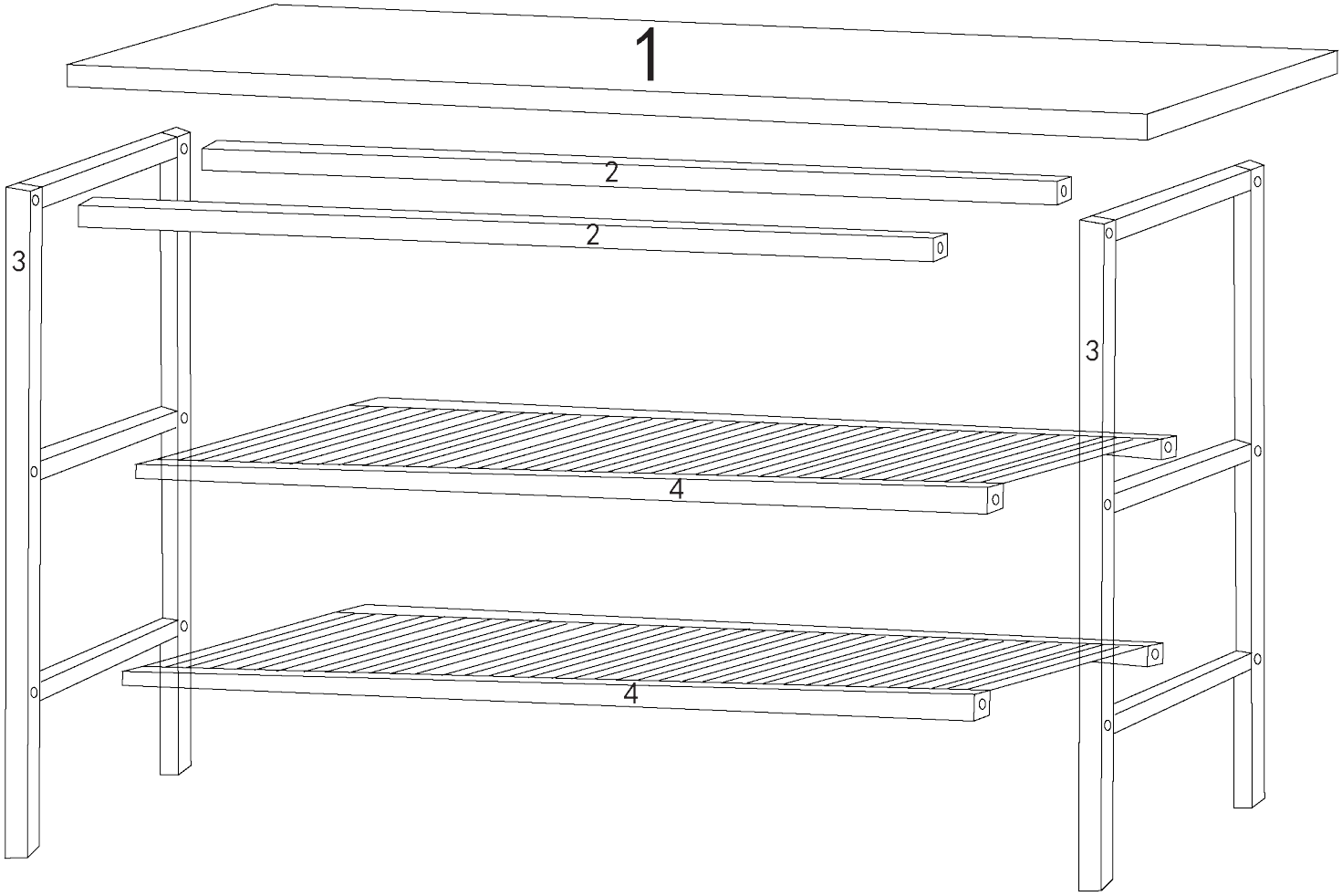

INSTRUCTION MANUAL
CABINET GROVE
1609304

A	B	C	D
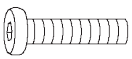 X8	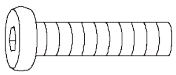 X8	X4	X1

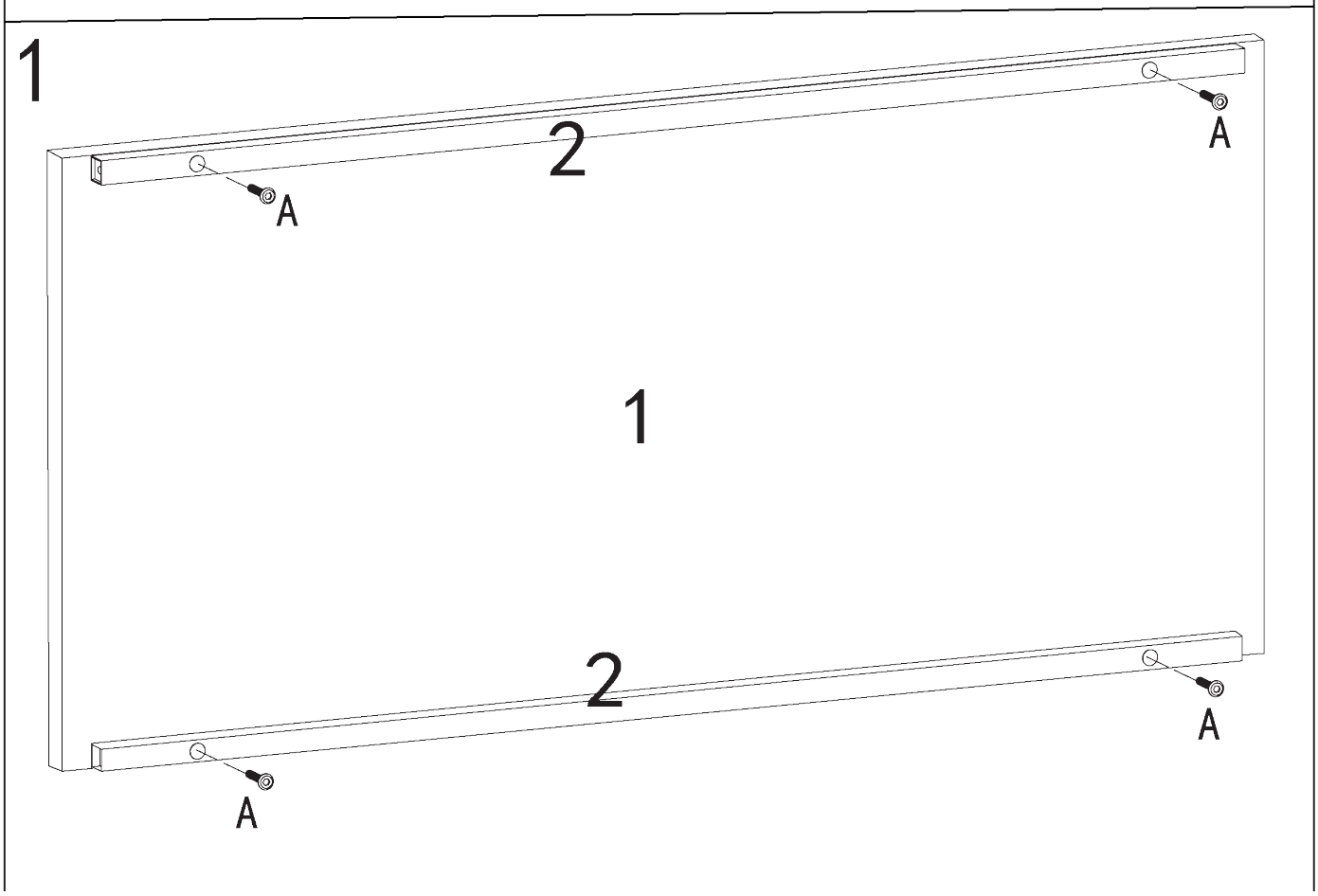

INSTRUCTION MANUAL
CABINET GROVE
1609304

bo-camp

2

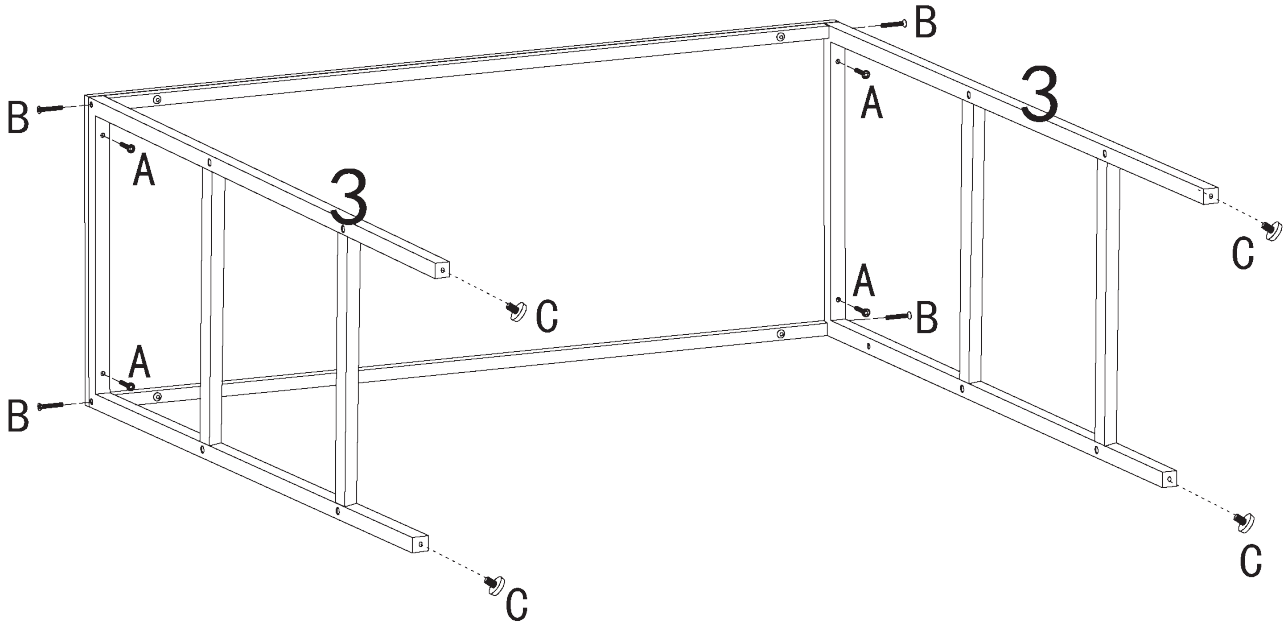
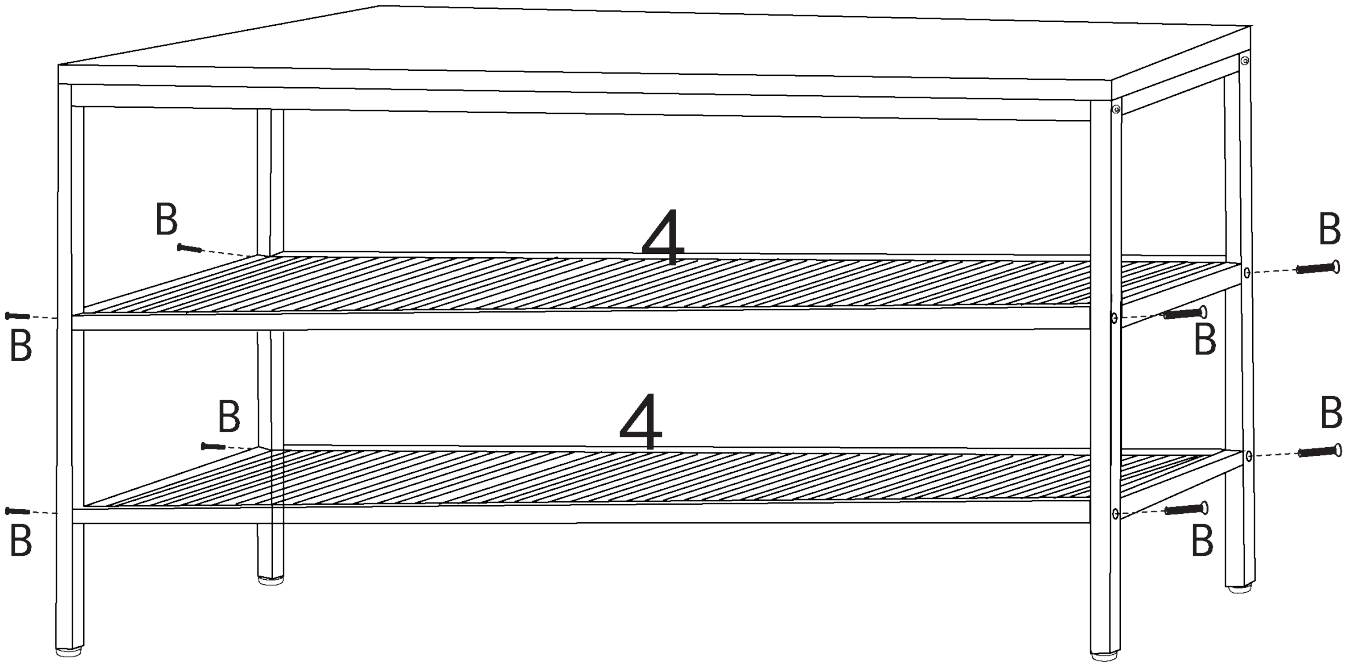
3